IB 15/120

Deutsch 3
English 15

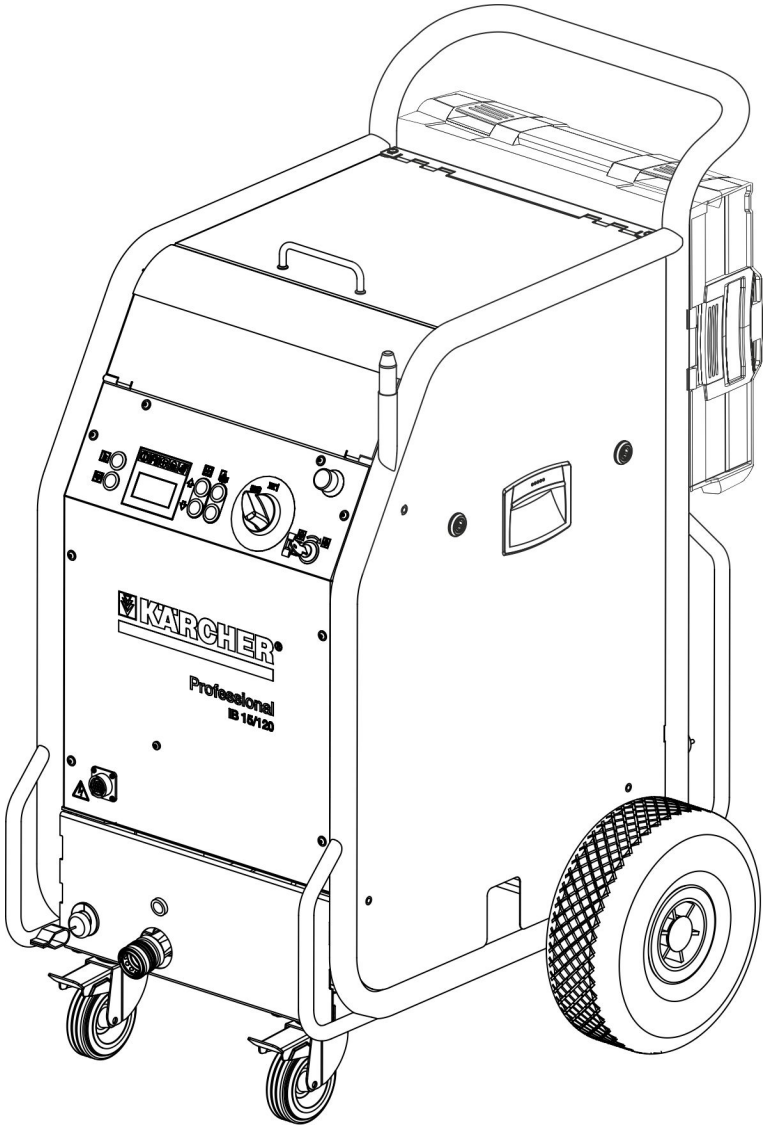

Register and win!
www.kaercher.com

59661120 01/19

Please read and comply with these original instructions prior to the initial operation of your appliance and store them for later use or subsequent owners.

Contents

Environmental protection	EN	1
Safety instructions	EN	1
Proper use	EN	2
Function	EN	2
Control elements	EN	3
Start up	EN	4
Operation	EN	6
Shutting down	EN	8
Transport	EN	8
Storage	EN	8
Maintenance and care	EN	8
Troubleshooting	EN	9
Technical specifications	EN	11
Accessories	EN	12
Warranty	EN	12
EU Declaration of Conformity	EN	12

Environmental protection

The packaging material can be recycled. Please do not place the packaging into the ordinary refuse for disposal, but arrange for the proper recycling.

Old appliances contain valuable materials that can be recycled; these should be sent for recycling. Batteries, oil, and similar substances must not enter the environment. Please dispose of your old appliances using appropriate collection systems.

Notes about the ingredients (REACH)
You will find current information about the ingredients at:
www.kaercher.com/REACH

Safety instructions

The appliance may only be operated by persons who have read and understood the contents of this operating instructions manual. Please ensure that you conform to all the safety instructions and regulations.

➔ This operating instructions manual must be stored in such a way that it can be easily accessed by the operator.

Danger or hazard levels

⚠ Danger

Immediate danger that can cause severe injury or even death.

⚠ Warning

Possible hazardous situation that could lead to severe injury or even death.

Caution

Possible hazardous situation that could lead to mild injury to persons or damage to property.

Symbols on the machine



⚠ Danger

Risk of injury on account of flying dry ice pellets. Do not direct the jet pistol on persons. Keep third persons away from the place of use and when the machine is being operated (by cordoning off the area).
Do not touch/hold the nozzle or the dry ice jet when the machine is running.



⚠ Danger

Risk of suffocation on account of carbon dioxide. The dry ice pellets are made of solidified carbon dioxide. The carbon dioxide content in the air at the place where the machine is used will increase when the machine is running. Ensure adequate ventilation at the place of use; if possible, use an alarm to warn persons. Symptoms of high levels of carbon dioxide in the air that is breathed in:

- *3...5%: headache, faster breathing.*
- *7...10%: headache, nausea and perhaps even unconsciousness.*

If any of these symptoms occur, please switch off the machine immediately and get a breath of fresh air; improve the ventilation before starting work again with the machine or use respirators.
Follow the safety specifications of the manufacturer of dry ice.



⚠ Danger

Risk of injury on account of electro-static discharge; risk of damage to the electronic components. The object being cleaned can get charged electrically during the cleaning process. Provide suitable earthing for the object being cleaned and ensure that the earthing remains intact during the entire cleaning process.

⚠ Danger

Risk of injury on account of electric shock. Pull the plug out of the socket before opening the control cabinet.



⚠ Danger

Risk of cold burns. Dry ice has a temperature of -79 °C. Never touch dry ice or cold parts of the machine without appropriate protection.



⚠ Danger

Risk of injury on account of flying dry ice pellets or dirt particles. Wear close fitting safety goggles.
Risk of hearing impairment. Wear ear-protection aids.
The protective equipment may not prevent visual contact and the communication with the work environment.



⚠ Danger

Risk of injury on account of flying dry ice pellets or dirt particles.
Risk of injury when touching cold appliance parts.
Wear protective gloves and long-sleeved protective overalls as per EN 511.

General notes on safety

⚠ Danger

Risk of injury if the machine is left running in an unattended state. Disconnect the mains plug from the socket before performing any work.

⚠ Danger

Risk of injury on account of electric shock. Pull the plug out of the socket before opening the control cabinet.

⚠ Danger

Risk of cold burns on account of dry ice or cold parts of the machine. While working on the machine, wear appropriate safety gear for protection against cold or remove dry ice and let the machine heat up.

⚠ Danger

Danger arising from volumetric expansion and cryogenic burn.
Never put dry ice in your mouth.

⚠ ***Warning***

Risk of injury on account of the recoil force of the jet pistol. Ensure that you are standing at a safe place and hold the jet pistol properly in your hand before pressing the trigger of the jet pistol.

⚠ ***Danger***

Risk of injury on account of flying objects. Fix light cleaning objects properly to prevent them from being dragged off with the dry ice jet.

⚠ ***Warning***

Danger of crushing on account of the dosing equipment. Always remove the machine plug from the socket before removing the protective shield of the dry ice container.

Specifications and Guidelines

For the operation of this system the following regulations and directives are applicable in the Federal Republic of Germany (available from Carl Heymanns Verlag KG, Luxemburger Straße 449, 50939 Cologne):

- BGV D 26 Spray jet tasks
- Executing instructions for BGV D 26
- BGR 117 Working in closed rooms
- BGR 139 safety rules for persons - emergency signal systems.
- BGR 189 Using safety gear
- BGR 195 Using of safety gloves
- BGR 500 use of work equipment
- BGI 534 Working in closed rooms
- BGI 836 Gas warner

Observe national safety provisions and safety instructions as well as national provisions of occupational health and safety agencies and trade associations!

Safety Devices

Emergency-stop button

If the emergency stop button is pressed, the dry ice dosing is stopped and the air flow from the nozzle is interrupted.

Switch-off in case of emergency

➔ Release the trigger of the jet pistol.

➔ Press emergency-stop button.

The dry ice dosing is topped and the air flow from the nozzle is interrupted.

➔ Interrupt the compressed air supply.

Proper use

The machine is used to remove dirt using dry ice pellets that are speeded up using an air jet.

The machine should not be operated in explosive environments.

Use only dry ice pellets as jet medium. Using any other jet medium can cause damage to the machine.

Function

The air pressure reaches the jet pistol via a pressure regulation valve. The valve opens when the trigger of the jet pistol is pressed and the air flow comes out from the jet pistol. Additionally, dry ice pellets are dosed into the air jet via the dosing device. The additional dosing can be switched off by means of the operating mode switch. The dry ice pellets hit the surface to be cleaned and remove the dirt. Additional thermal stress occurs between the dirt and the object to be cleaned due to the -79 °C cold dry ice pellets; this contributes to the removal of the dirt. At the same time, dry ice immediately gets coverted into gaseous carbon dioxide on contact and requires 700 times the volume of dry ice. Thus, the dirt penetrated by the dry ice thus gets thrown off. During the spraying operation through the jet, a vibrator located on the dry ice container ensures continuous sliding of the dry ice pellets.

Control elements

Device

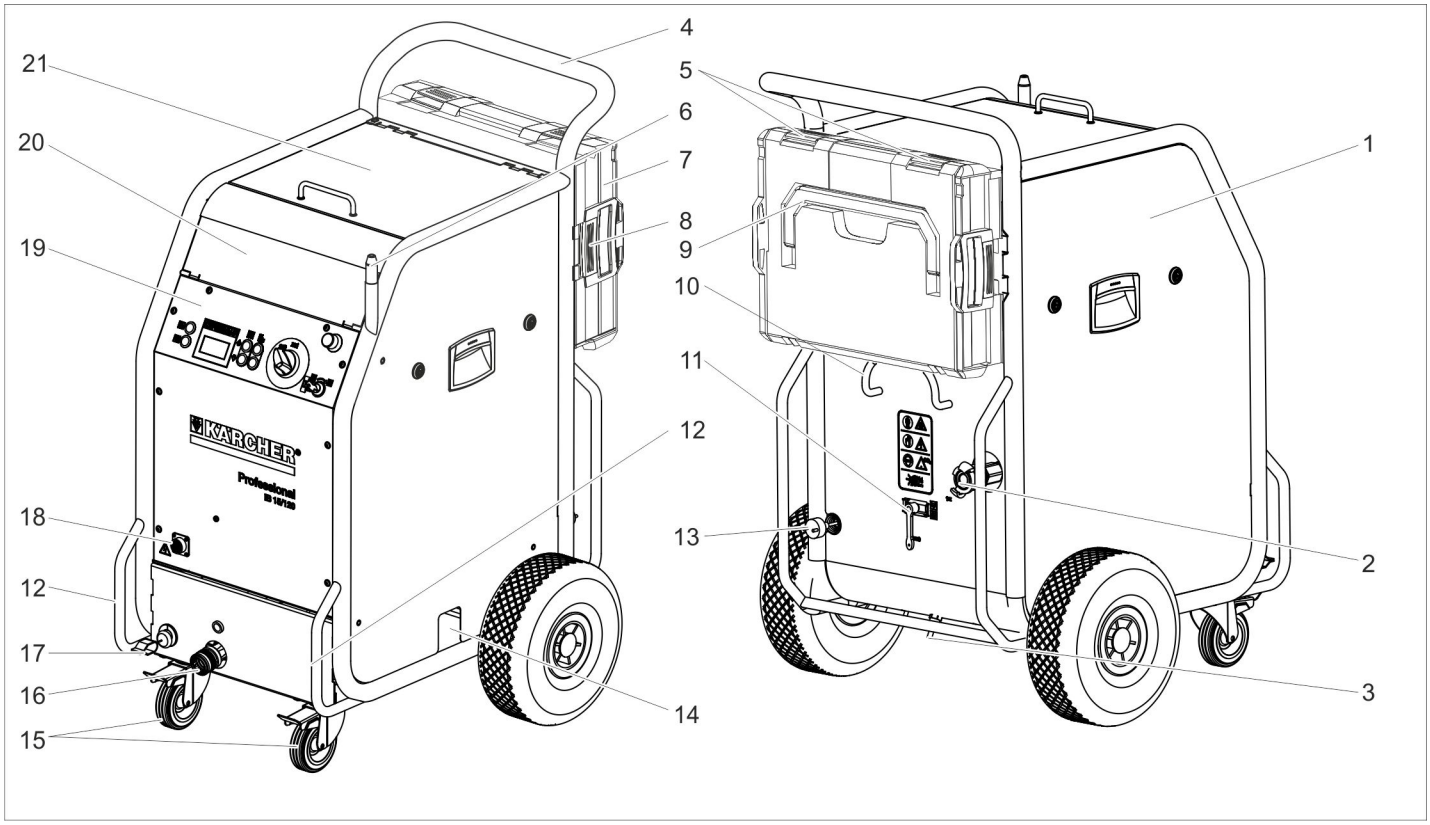

1 Fuse F1, below the side panel
2 Compressed air connection
3 Condensate drain-out
4 Push handle
5 Closure, case
6 Holder for jet pistol
7 Case for accessories
8 Unlocking device, case mounting
9 Carrying handle, case
10 Cable clamp
11 Pressure relief valve, condensate draining of the water separator
12 Transport handle, bumper at the rear
13 Mains cable with mains plug
14 Dry ice outlet for emptying the container
15 Guiding roll with fixed position brake
16 Coupling spray agent hose
17 Earth wire with clamp
18 Coupling of the control cable
19 Operating field
20 Storage compartment for accessories
21 Cover of the dry ice container

Operating field

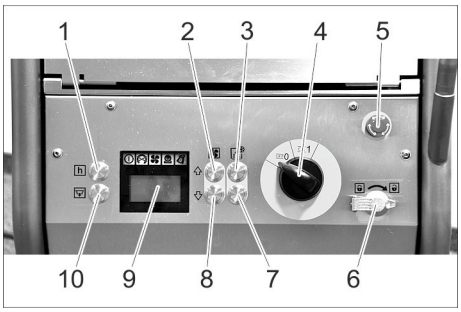

1 Statistics key, reset counter
2 Key "increase jet pressure"
3 Increase the dry ice dosing
4 Power switch
5 Emergency-stop button
6 Key switch
7 Decrease the dry ice dosing
8 Key "decrease jet pressure"
9 Display
10 Key to empty the dry ice container

Display

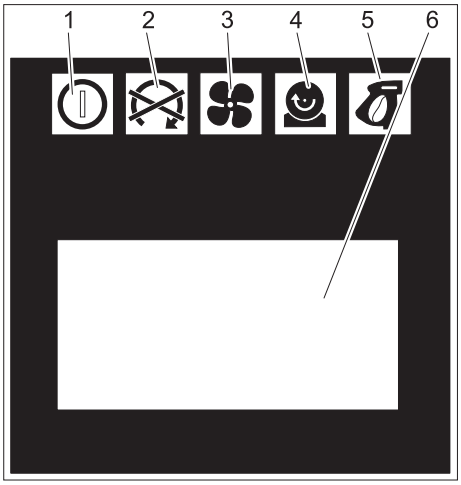

1 Indicator lamp - control voltage
green: Control voltage OK
red: Control voltage too low
yellow: Emptying of dry ice container active
2 Indicator lamp emergency STOP
red: Emergency stop button activated
green: Emergency stop button not activated
3 Indicator lamp - compressed air
green: Pressure OK
orange: selected jet pressure not reached
red: Pressure too low (below 0.15 MPa/ 1.5 bar)
4 Indicator lamp – dosing device
green: Drive OK
red: Error in drive

5 Indicator lamp - jet pistol
green: Jet pistol OK
orange: The trigger of the jet pistol was activated during the switch-on process
red: Jet pistol disconnected or control line damaged
6 Display field

Jet equipment

Jet gun

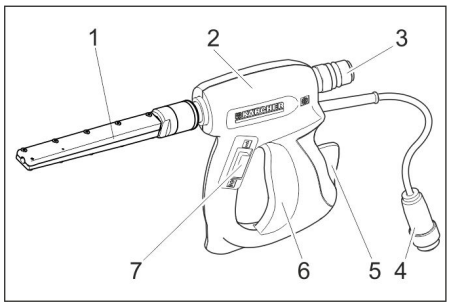

1 Nozzle
2 Jet pistol
3 Coupling spray agent hose
4 Coupling of the control cable
5 Safety lever
6 Trigger
7 Operating type switch
Position "1": Compressed air jet
Position "2": Dry ice jet (compressed air and dry ice pellets)

Jet pistol Advanced (option)

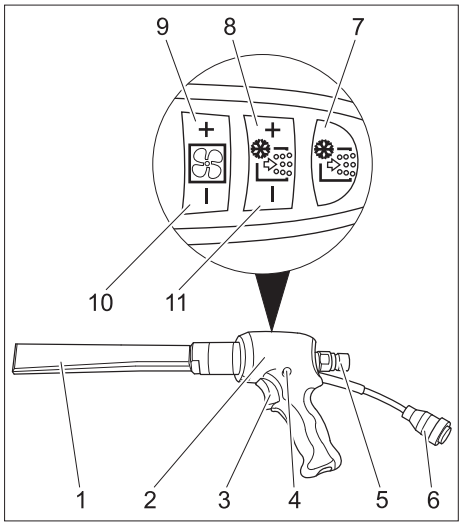

1 Nozzle
2 Jet pistol
3 Trigger
4 Safety button
5 Coupling spray agent hose
6 Coupling of the control cable
7 Key for the dry ice dosing on/off
Illuminates red when the dry ice dosaging is switched off
8 Increase the dry ice dosing
9 Key "increase jet pressure"
10 Key "decrease jet pressure"
11 Decrease the dry ice dosing

Case for accessories

The case serves the storage of the nozzles and the associated tools.

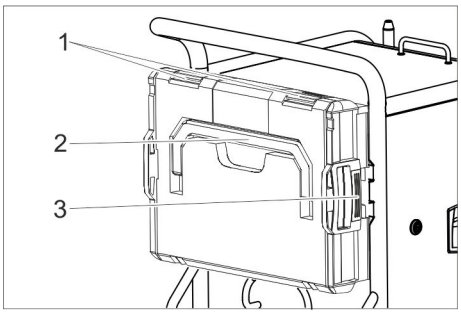

1 Lock
2 Carrying handle
3 Unlocking

Opening the case

➔ Open locks.
➔ Swivel the lid downwards.

Caution

Risk of damage, do not place heavy objects on the opened lid.

Separating the case from the appliance.

➔ Push the unlocking devices and remove the case.

Attaching the case to the appliance.

➔ Turn the case so that the closures are pointing upwards.
➔ Place one side of the case on the holder and lock it place.
➔ Press the case against the appliance and lock the opposite holder in place.

Start up

⚠ ***Danger***

Risk of injury on account of flying dry ice pellets.
While preparing the appliance, check and ensure that all components, especially the spray agent hose are in proper condition. Replace damaged components with defect-free ones.
Clean dirty components and ensure that they are in proper working condition.

➔ Place the machine on a horizontal, even surface and block the parking brakes of the steering rollers.

Note:

The spray agent hose can be covered with a protective hose to protect it against wear and soiling. If necessary, push the protective hose over the spray hose prior to connecting it.

➔ Connect the spray agent hose to the machine and secure it.
➔ Connect the jet pistol to the spray agent hose and secure it.
➔ Connect the control cable to the appliance.
➔ Connect the control cable to the appliance.

Nozzles

Note

The choice of the nozzle depends on the material of the object to be cleaned and the contamination.
The available air volume also significantly influences the selection of the nozzle.
All nozzles can be screwed on top of the threading of the jet pistol without using any tools. The threaded surfaces on the nozzle are to be used to loosen tight nozzles using a spanner.

Caution

Risk of cold welding Smear the enclosed grease on the nozzle threading before installing it.

Selecting the nozzle

The following table shows the air consumption with different nozzles.
Each nozzle is marked with an air volume index XS - XXL.
By means of the nozzle table the air consumption for each nozzle can be determined.

Area capacity	Jet aggressiveness		very low		low			medium				high			very high		
	Pressure (bar)		2	3	4	5	6	7	8	9	10	11	12	13	14	15	16
	Nozzle size																
	XS	Ø5 mm	0,40	0,70	0,90	1,10	1,30	1,60	1,80	2,00	2,30	--	--	--	--	--	--
	S	Ø6 mm	0,70	1,05	1,45	1,80	2,07	2,40	2,78	3,14	3,48	3,78	4,13	4,35	4,70	5,10	5,40
	M	Ø7 mm	0,93	1,38	1,85	2,28	2,64	3,05	3,63	4,03	4,57	4,80	5,30	5,80	6,22	6,65	7,15
	L	Ø8 mm	1,09	1,64	2,26	2,78	3,20	3,79	4,40	4,95	5,45	5,90	6,40	7,15	7,67	8,15	8,80
	XL	Ø9 mm	1,50	2,16	2,88	3,50	4,03	4,60	5,41	6,01	6,53	7,27	8,08	8,70	9,28	9,80	10,40
	XXL	Ø10 mm	1,52	2,20	2,97	3,66	4,27	5,00	5,82	6,52	7,40	8,00	8,90	9,50	10,05	10,70	11,30
			Air consumption in m³/min														

	m³/min	
	...1	Industrial compressed air service network Entry-level compressor e.g. Käser M 17, Compair C 14
	1...2	Industrial compressed air service network small compressor e.g. Käser M 31, Compair C 20GS
	2...3	medium compressor e.g. Käser M 57, Compair C 35
	3...5	
	5...7	medium compressor e.g. Käser M 80, Compair C 55
	7...10	large compressor e.g. Käser M 122, Compair C 105
	10...	extra large compressor e.g. Käser M 250, Compair C 200

Round jet nozzle

Apart from the round jet nozzle delivered with the machine, other round jet nozzles with varying cross-sections are available as accessories.

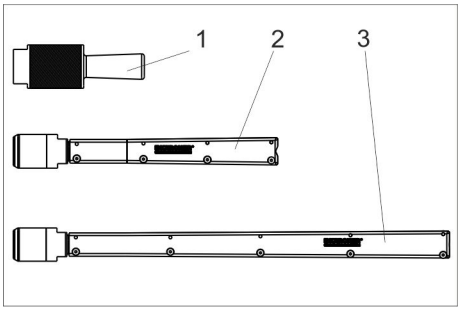

1 Round jet nozzle, short
2 Round jet nozzle, long
3 Round jet nozzle, extra long

➔ Place the round jet nozzle on the threaded support of the jet pistol and tighten it by hand.

Flat jet nozzle

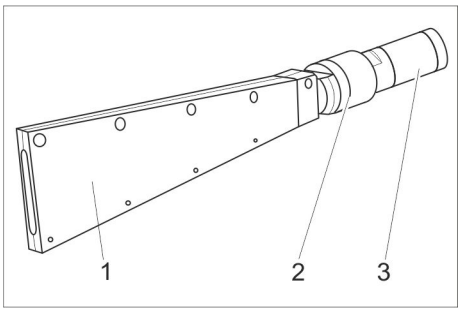

1 Diffuser
2 Union joint
3 Nozzle insert

The flat jet nozzle consists of a nozzle insert and a diffuser. Nozzle inserts with varying cross-sections are available as accessories.

➔ Place the nozzle insert on the threaded support of the jet pistol and tighten it by hand.
➔ Place the diffuser on the nozzle attachment.
➔ Turn the diffuser in such a way that the flat jet is properly aligned with the jet pistol.
➔ Tighten the union joint by hand.

Scrambler (accessory)
The scrambler crushes the dry ice pellets and is mounted between the jet pistol and the nozzle.
The alignment of the 4 holes plates in the scrambler indicates the degree of comminution.
Select the degree of comminution:

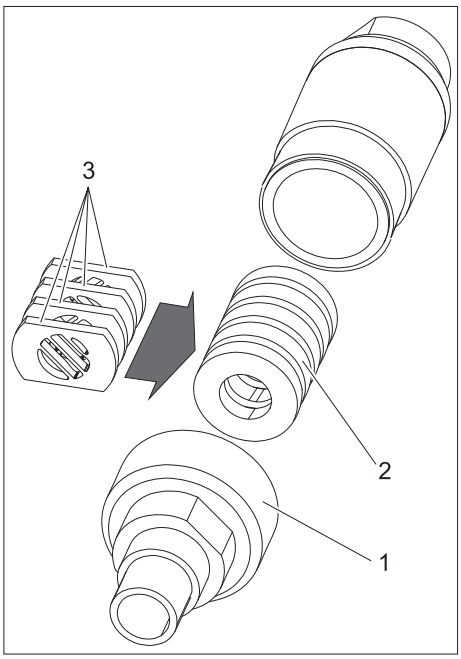

1 Screw connections
2 Magazine
3 Hole plate

➔ Remove the screw connection.
➔ Remove the magazine with hole plates.

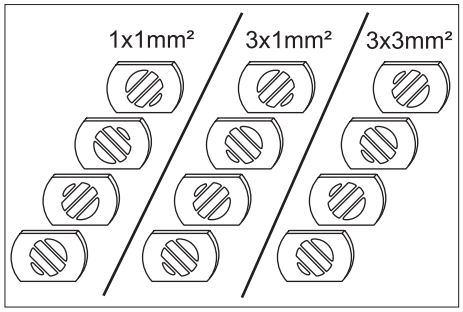

➔ Align the hole plates, as shown above, in the magazine (3 possibilities). The above specifications in the illustration refer to the size of the permeation openings.
➔ Insert the magazine with hole plates into the scrambler.
➔ Unscrew the screw connection and tighten it.

Nozzle extension (accessory)
An extension piece can be inserted between the jet pistol and the nozzle.

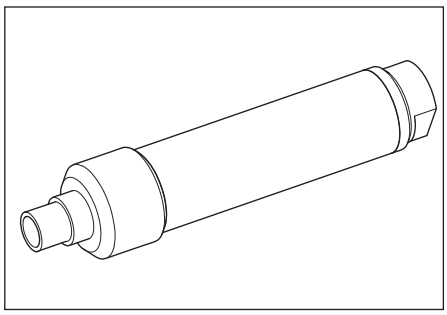

Angle jet pipe (accessories)
An angle jet pipe is installed between the jet gun and the nozzle.

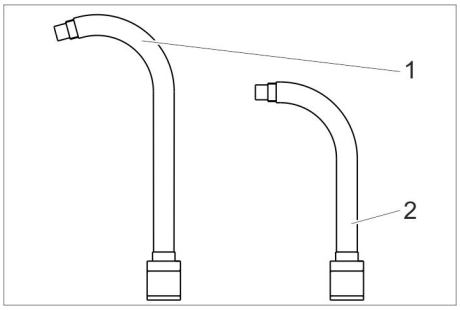

1 Angle jet pipe 105°
2 Angle jet pipe 90°

⚠ ***Warning***
Risk of injury. When the angle jet pipe is used, a torsional moment acts on the jet pistol in addition to the repulsion power. Hold the jet pistol tightly.
Start your work with low jet pressure and increase the jet pressure as necessary.

Handle (accessory)
The handle can be fastened on the extension piece.

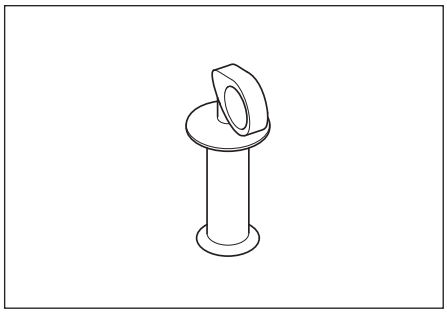

Working light (accessory)
(only with Advanced jet pistol)

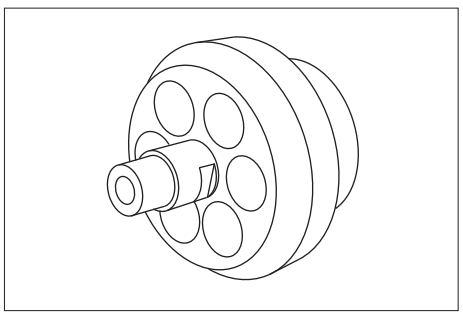

The working light is connected between the jet pistol and the nozzle. Switching on and switching off is described in the chapter "Operation/Basic Settings".

Connect compressed air supply

Note
For failure-free operation the compressed air must have a low moisture content. The compressed air must also be free from oil, dirt and foreign particles.
The compressor must at least be equipped with aftercooler, oil and water separator.
➔ Close pressure relief valve.
➔ Connect the compressed air inlet pipe to the compressed air connection point of the device.
The maximum permissible supply pressure of 1.6 MPa (16 bar) must not be exceeded.

Establish mains contact

⚠ ***Danger***
Risk of electric shock.
The socket to be used must have been installed by an electrician and be compliant with IEC 60364-1.
The machine must have an FI fuse of type B, 30 mA.
Check the mains cables of the machine each time before using the machine to see that it is not damaged. Never operate a machine with damaged cables. Get the damaged cables replaced by an electrician.
The extension cord must be protected by IPX4 safety mechanism and the cables must at least be compliant with H 07 RN-F 3G1.5.
➔ Insert the mains plug into the socket.

Operation

Filling dry ice

⚠ ***Danger***
Risk of cold burns. Dry ice has a temperature of -79 °C. Never touch dry ice or cold parts of the machine without appropriate protection. Wear protective gloves and protective overalls.
➔ Open the cover of the dry ice container.
➔ Check the dry ice container for presence of foreign particles and condensate, remove them if found.
➔ Fill dry ice pellets into the container.

Caution
Risk of damage to the device. Use only dry ice pellets as jet medium. The use of any other spray agent will lead to loss of warranty coverage.
➔ Close the cover of the dry ice container.

Note
To avoid disturbances due to agglutinated dry ice pellets, it is useful to fully use up the contents of the dry ice container before adding fresh dry ice. If the machine is to remain idle for a longer time, operate the device until the dry ice container is empty or empty the container via the dry ice emptying function.

Settings

Note

The settings depend on the substances contained in the detergent and the type of dirt.

➔ Release emergency-stop button by turning.

➔ Set the appliance switch to "I".

➔ Turn the keyswitch in a clockwise direction.

➔ Increase/reduce the jet pressure by using the respective keys.

Note

The higher you set the jet pressure, so much greater (more agressive) will the cleaning effect be.

➔ Increase/reduce the dry ice dosing by using the respective keys.

➔ Turn the keyswitch counter-clockwise and remove the key.

The automatic closure of the key hole will prevent contamination during operation.

When the key is removed, the device is protected against changes to the settings and resetting the statistics values.

Operation

➔ Carry out maintenance jobs "daily before starting work" (see section "Maintenance and Care").

⚠ ***Danger***

Risk of injury on account of flying dry ice pellets. Do not direct the jet pistol on persons. Keep third persons away from the place of use and when the machine is being operated (by cordoning off the area).
Do not touch/hold the nozzle opening or the dry ice jet when the machine is running.
First stop the compressed air supply before disconnecting the jet gun from the spray agent hose and the spray agent hose from the device; remove all pressure from the system and then pull the plug out of the socket.

➔ Cordon off the working area to prevent persons coming close to the machine when it is being operated.

⚠ ***Danger***

Risk of suffocation on account of carbon dioxide. The dry ice pellets are made of solidified carbon dioxide. The carbon dioxide content in the air at the place where the machine is used will increase when the machine is running. Sufficiently ventilate the workstation and use a personal warning device or breathing apparatuses, if necessary.
Indication of high carbon dioxide concentration in the breathing air:

- *3...5%: headache, faster breathing.*
- *7...10%: headache, nausea and perhaps even unconsciousness.*

If any of these symptoms occur, please switch off the machine immediately and get a breath of fresh air; improve the ventilation before starting work again with the machine or use respirators.
Carbon dioxide accumulates in lower situated places. Prevent accumulation by means of active ventilation measures.
Follow the safety specifications of the manufacturer of dry ice.

⚠ ***Danger***

There is a danger because of dangerous to your health materials. If dust that is dangerous to your health can be generated, the appropriate safety measures will have to be taken prior to beginning work.

⚠ ***Danger***

Risk of explosion!
Do not work on light metals and iron-containing substances simultaneously.
If you alternate between working on light metals and iron-containing parts, the work area and the suction device must be cleaned between work cycles.
Danger due to dust explosion. If inflammable dusts are formed during work, accumulations of dust must be avoided. Regularly remove dust before critical amounts are accumulated.

➔ Ensure adequate ventilation while working in closed rooms in order to keep the carbon dioxide concentration in the atmospheric air in the room below the danger level.

➔ Attach the object to be cleaned if necessary.

⚠ ***Danger***

Risk of injury on account of electro-static discharge; risk of damage to the electronic components. The object being cleaned can get charged electrically during the cleaning process. Provide suitable earthing for the object being cleaned and ensure that the earthing remains intact during the entire cleaning process.

⚠ ***Warning***

Risk of injury on account of tripping and falling.
Lay spray agent hose and control line in a way that they do not pose a risk of stumbling during work.

Caution

Risk of damage by foreign objects falling into the dry ice container. Keep cover of the dry ice container closed during operation.

➔ Connect the electrically conductive earth wire to the object to be cleaned or earth the object to be cleaned in another way.

➔ Wear safety gear, safety gloves, close fitting safety goggles and ear-protection.

➔ Switch on the compressed air supply.

➔ Release emergency-stop button by turning.

➔ Set the operating type for the compressed air jet to "1" or dry ice jet to "2" on the operating type switch of the jet pistol.

➔ Choose a safe place to stand, assume a secure body stance to avoid being thrown off-balance by the recoil pressure of the jet pistol.

In order to prevent the sudden recoil, a gradual increase of the jet pressure can be set up (see "Operation/Basic Setting", menu item "soft start").

➔ Press in the safety knob of the jet pistol.

➔ Activate the dry ice jet by pressing the trigger of the jet pistol and carry out the cleaning operation.

Note

When using the Advanced jet pistol, the dosing of dry ice pellets can be switched on or off via the dry ice dosing on/off key on the jet pistol. When the dosing is turned off, the key illuminates red, the display shows "ice off".
Moreover, when the Advanced jet pistol is used, the jet pressure and the dry ice quantity can be adjusted on the jet pistol.

Caution

Risk of damage to the dosing equipment on account of dirt. Keep the lid of the dry ice container closed during the spraying operation to prevent sprayed off dirt from entering it.

Switch-off in case of emergency

➔ Release the trigger of the jet pistol.

➔ Press emergency-stop button.

The dry ice dosing is topped and the air flow from the nozzle is interrupted.

➔ Interrupt the compressed air supply.

Switching on after emergency-stop

➔ Release emergency-stop button by turning.

Interrupting operation

➔ Release the trigger of the jet pistol.

➔ During breaks in operation, you can insert the jet pistol on the holder on the machine.

Note

During longer service interruptions, the dry ice pellets can agglutinate in the dry ice container. As far as possible, do not interrupt operations for more than 20 minutes. In case of extended interruptions, empty the dry ice container.

Drain off the condensate.

A water separator cleans the compressed air flowing to the device. This collects condensate in the water separator, that needs to be drained once in a while.

➔ Place the collection trough under the condensate drain screw.

➔ Open the pressure relief valve slowly and wait until the condensate has been drained from the device.

Note

Please dispose of condensate in an environmentally friendly manner.

Statistics functions

Retrieving values

➔ Set the appliance switch to "I".

➔ Press the Statistics key briefly to display the operating duration.
t: Operation duration since the last reset.
T: Total operating duration.

➔ Press the Statistics key briefly to display the processed dry ice amount.
m: Dry ice volume since the last reset.
M: Total dry ice volume.

➔ Press the Statistics key briefly to display the average dry ice consumption.
q: Average dry ice consumption since the last reset.
Q: Average total dry ice consumption.

Reset values

➔ Turn the keyswitch in a clockwise direction.

➔ Press the statistics key for 4 seconds.

Note

The total values cannot be erased.

Basic settings

➔ Press the keys to increase and decrease the jet pressure at the same time and hold them, turn the keyswitch clockwise.

In the operating mode basic settings, the keys have the following functions:

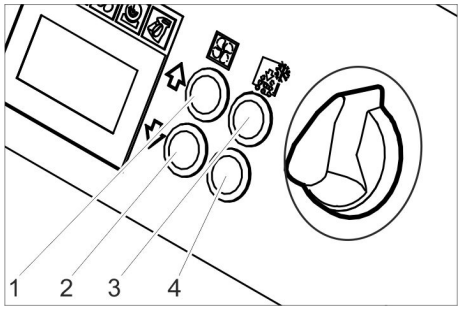

1 Increase value
2 Decrease value
3 Menu point to the top
4 Menu point to the bottom

Menue point	Setting range	Description
Soft start	0, 1, 2, 3, 4, 5 seconds	Soft start, duration until the selected jet pressure is reached
T_Dump	1, 2, 3, 4, 5 minutes	Duration of the dry ice emptying process
Language	metric, imperial	Measurement units metric: kg/h, MPa imperial: lbs, psi
Beleuchtung	ON/OFF	Switch the nozzle lighting (option) on/off
Demo mode	ON/OFF	Demo mode: The operation is simulated, compressed air and dry ice dispensing is locked.

Finish the basic settings

➔ Turn the keyswitch counter-clockwise.

Shutting down

⚠ ***Danger***

Risk of cold burns. Dry ice has a temperature of -79 °C. Never touch dry ice or cold parts of the machine without appropriate protection. Wear protective gloves and protective overalls.

⚠ ***Danger***

Risk of injury on account of flying dry ice pellets. Do not direct the jet pistol on persons. Keep third persons away from the place of use and when the machine is being operated (by cordoning off the area).

➔ Close the compressed air supply.

➔ Place the collection trough under the condensate drain screw.

➔ Open the pressure relief valve slowly and wait until the condensate and the compressed air have been drained from the device.

➔ Place the collection trough under the dry ice exit.

➔ Press the key to empty the dry ice and wait until the dry ice container is empty.
The dry ice emptying stops after the preset time has elapsed (see "Basic Settings").
If needed, press the key to empty the dry ice container several times.

Note

Please dispose of condensate in an environmentally friendly manner.

➔ Set the appliance switch to "0/OFF“.

➔ Disconnect the machine from the compressed air inlet.

➔ Disconnect the main plug from the socket.

➔ Clean and roll up the grounding rope.

➔ Dispose of blasting debris according to applicable regulations.

Transport

⚠ ***Danger***

Risk of accident on account of dry ice residue in the device. Remove all traces of dry ice before transporting the device in closed vehicle; otherwise there is a risk of carbon dioxide suffocation to the co-passengers.

➔ Carry out all the steps listed in the chapter "Shut down" before transporting the device.

➔ Mount the appliance on the transport vehicle.

➔ Lock the breaks of the steering rollers.

➔ Fasten the device to the vehicle using fastening belts.

Storage

Caution

Risk of injury and damage! Note the weight of the appliance in case of storage.

This appliance must only be stored in interior rooms.

Maintenance and care

Maintenance instructions

The bases of a safe operating of the equipment is thr regularly maintenance according to the following maintenance plan.
Use exclusively original parts of the manufacturer or those parts recommended by him like

– parts and wearing parts,
– accessories parts,
– operating materials,
– cleaning agents.

⚠ ***Danger!***

Risk of accident while working on the appliance. Carry out all the steps described in the chapter "Shut down" before starting anhy work on the device.

⚠ ***Danger***

Risk of cold burns on account of dry ice or cold parts of the machine. While working on the machine, wear appropriate safety gear for protection against cold or remove dry ice and let the machine heat up.

⚠ ***Danger***

Danger arising from volumetric expansion and cryogenic burn.
Never put dry ice in your mouth.

Caution

Risk of damage. Do not use solvents, petrol or oil-based cleaners to clean the jet pistol.

Maintenance contract

In order to guarantee a reliable operation of the equipment, we success, you signed a maintenance agreement. Please refer to your local Kärcher service department.

Maintenance schedule

Daily before starting operations

➔ Check the spray agent hose for damages, bends and other damages. Soft areas in the hose indicate wear on the inner side of the hose. Replace the defective or worn out hose with a new hose.

➔ Check electrical cable and plug for damages. Get defective parts replaced by Customer Service.

Every 100 operating hours

➔ Check couplings of the spray agent hose, on the device, at the jet pistol for damages or wear and tear. Get Customer Service to replace the defective hose, defective couplings on the device or jet pistol.

➔ Check dosing equipment for damages or leaks. If you find any damages/ leaks, inform Customer Service.

➔ Check the attachment caps of the rear wheels for proper seating.

Every 500 hours or once a year

➔ Get the device checked by Customer Service.

Every 2 years

➔ Replace the spray agent hose at least once in 2 years.

Opening the device

The side panels of the device must be removed to access the device for maintenance jobs:



1 Snap closure
2 Side panels

➔ Open the snap closures in the anti-clockwise direction.

➔ Remove side panel.

Maintenance Works

Replace the filter insert in the water separator.

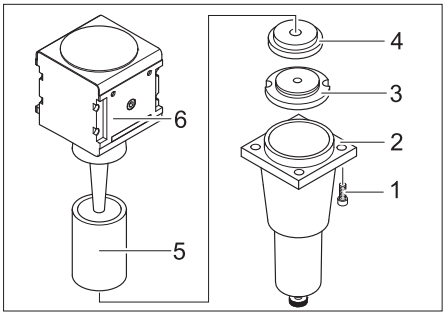

1 Screw
2 Lower part
3 Nut
4 Disc
5 Filter inlay
6 Upper section

➔ Loosen 4 screws.

➔ Remove the lower part.

➔ Unscrew the nut.

➔ Remove the disc.

➔ Remove the filter inlay and replace it with a new filter inlay.

➔ Reassemble the water separator in the reverse sequence.

Tests

According to the specifications of BDV D 26, the following tests must be conducted by a technical expert. The results of the tests must be documented in a test report. The device operator must carefully store the test report until the next test.

After a working break of more than one year

➔ Check the device to see that it is in a proper condition and is functioning well.

After changing the installation site

➔ Check the device to see that it is in a proper condition, is functioning well and has been installed properly.

The operational safety of the device can get hampered on account of maintenance jobs or any modifications that have been done.

➔ Check the device to see that it is in a proper condition, is functioning well and has been installed properly.

Troubleshooting

⚠ ***Danger!***

Risk of accident while working on the appliance. Carry out all the steps described in the chapter "Shut down" before starting anhy work on the device.

⚠ ***Danger***

Risk of cold burns on account of dry ice or cold parts of the machine. While working on the machine, wear appropriate safety gear for protection against cold or remove dry ice and let the machine heat up.

⚠ ***Danger***

Danger arising from volumetric expansion and cryogenic burn.
Never put dry ice in your mouth.

Faults with display

Display	Indicator lamp (KL)	Possible cause	Remedy	By whom
E001	KL control voltage glows red	Control voltage too low	Turn off the appliance, wait briefly, turn on the appliance once again. Have the socket checked. If this error recurs, please contact the Kärcher customer service department	Operator
E002	KL emergency stop glows red	Emergency-stop button has been pressed.	Release emergency-stop button by turning.	Operator
E003	KL compressed air glows red	Pressure of the compressed air supply too low	Increase the pressure. Turn off the appliance, wait briefly, turn on the appliance once again.	Operator
E004	KL dosing glows red	Interference in the dosing	Turn off the appliance, wait briefly, turn on the appliance once again. If this error recurs, please contact the Kärcher customer service department	Operator
E005	KL jet pistol glows red	Connection between the device and the jet pistol is faulty.	Check for correct connection of the couplings in the control line. Check control cable for damages.	Operator
E006	KL jet pistol glows red	Short in jet pistol or control cable	Replace the jet pistol or the jet hose with a control cable.	Operator
E007	KL compressed air glows red	Fault in the compressed air regulator valve	Call Customer Service.	Operator
E008	KL jet pistol glows orange	The trigger of the jet pistol was activated during the switch-on process or the releasing of the emergency stop key.	Release the trigger of the jet pistol.	Operator

Faults without display on the console

Fault	Possible cause	Remedy	By whom
No display inspite of power switch in position 1	Mains Plug not connected to the socket.	Insert the mains plug into a socket.	Operator
	Fuse F1 blown	Remove the side panel and unlock the fuse F1 by pressing on it.	Operator
No compressed air jet despite the trigger being drawn	Compressed air supply has too little pressure	Check pressure level.	Operator
	Jet pressure is set too low	Set the jet pressure to a higher level.	Operator
	Power supply has been interrupted	Check power supply. Indicator lamp "Device on" must glow green.	Operator
	Emergency-stop button has been pressed.	Release emergency-stop button by turning. Indicator lamp "Device on" must glow green.	Operator
	Control cable not connected properly	Check connection between control cable and the jet pistol and between the control cable and the device.	Operator
	Control cable is defective	Replace spray agent hose.	Operator
Compressed air jet is too weak	Jet pressure is set too low	Set the jet pressure to a higher level.	Operator
	Compressed air supply has too little pressure or the compressor output is low.	Check pressure and output.	Operator
	The filter insert in the water separator is plugged.	Replace the filter inlay in the water separator.	Operator
	Spray agent hose or jet pistol is blocked	Let the spray agent hose and jet pistol come to room temperature and remove the blocking. Increase working pressure and / or reduce the dry ice dosing.	Operator
No dry ice pellets in the compressed air jet	Dry ice dosing switched off (with jet pistol Advanced only), "Dry ice dosing on/off" button on the jet pistol illuminates red, display shows "Ice off".	Press the dry ice dosing key on the Advanced jet pistol.	Operator
	Dry ice container is empty	Refill the dry ice container	Operator
	Dry ice has melted	Empty the dry ice container and refill it with fresh dry ice pellets.	Operator
	Vibrator on the dry ice container is not working	Call Customer Service.	Operator
	Drive motor of the dosing equipment is overloaded	Let the dosing thaw	Operator
	Compressed air is exiting into the dry ice container	Clean the pressure balance channel in the dosing equipment.	Customer Service
	Dosing disc in the dosing unit is defective	Replace the dosing disc.	Customer Service

Technical specifications

Electrical connection		
Voltage	V	120
Current type		1~
Frequency	Hz	50
Connected load	kW	0,6
Protective class		IPX4
FI safety switch	delta I in A	0,03
Leakage current, typ.	mA	7,5
Compressed air		
Nominal width of hose	Inch	3/4
Pressure supply (max.)	MPa (bar)	1,6 (16)
Pressure supply (min.)	MPa (bar)	0,2 (2)
Compressed air consumption	m^3/min	2...12
Quality of compressed air	dry, oil-free	
Performance data		
Jet pressure (max.)	MPa (bar)	1,6 (16)
Diameter of dry ice pellets (max.)	mm	3
Dry ice consumption	kg/h	30...120
Dimensions		
Contents of dry ice container	kg	40
Width	mm	716
Depth	mm	850
Height	mm	1102
Weight with accessories	kg	101,5
Weight, operational, with filled dry ice container	kg	140
Weight of the jet equipment (spray agent hose, spray gun, tool case)	kg	10
Recoil force of hand spray gun (max.)	N	100
Torque of jet pistol (max.), only with angled nozzle	N	40
Sound pressure level L_{pA}	dB(A)	114
Sound power level L_{WA}	dB(A)	136
Uncertainty K	dB(A)	5
Machine vibrations		
Jet pistol	m/s^2	1,2
Hose for spraying agent	m/s^2	1,2

Accessories

Protective clothing

Full view protective goggles, anti-condensation, part no.: 6.321-208.0
Cold protection gloves with anti-slip profile, category III as per EN 511, part no.: 6.321-210.0
Ear protection with headgear, part no.: 6.321-207.0

Jet equipment

Round jet nozzle, L, long
Part no.: 4.574-019.0

Round jet nozzle, L, extra long
Part no.: 4.574-016.0

Round jet nozzle, M, long
Part no.: 4.574-018.0

Round jet nozzle, M, short
Part no.: 4.130-418.0

Round jet nozzle, L, short
Part no.: 4.130-419.0

Flat jet nozzle
Part no.: 4.130-423.0

Flat jet nozzle insert, M, 6 mm
Part no.: 4.130-421.0

Flat jet nozzle insert, L, 8 mm
Part no.: 4.130-420.0

Flat jet nozzle insert, XL, 10 mm
Part no.: 4.130-422.0

Angle jet pipe 90°
Part no.: 4.321-203.0

Angle jet pipe 105°
Part no.: 4.321-204.0

Nozzle extension, 300 mm long
Part no.: 4.130-417.0

Handle
Part no.: 6.321-206.0

Scrambler
Part no.: 4.110-015.0

Working light
Part no.: 2.815-422.0

Protective hose for jet pipe, plastic, 100 m
Part no.: 6.667-214.0

Warranty

The warranty terms published by our competent sales company are applicable in each country. We will repair potential failures of your appliance within the warranty period free of charge, provided that such failure is caused by faulty material or defects in fabrication. In the event of a warranty claim please contact your dealer or the nearest authorized Customer Service center. Please submit the proof of purchase.

EU Declaration of Conformity

We hereby declare that the machine described below complies with the relevant basic safety and health requirements of the EU Directives, both in its basic design and construction as well as in the version put into circulation by us. This declaration shall cease to be valid if the machine is modified without our prior approval.

Product: Dry ice jet unit
Type: 1.574-xxx

Relevant EU Directives
2006/42/EC (+2009/127/EC)
2014/30/EU

Applied harmonized standards
EN 55014–1: 2006+A1: 2009+A2: 2011
EN 55014–2: 2015
EN 60204–1
EN 61000–3–2: 2014
EN 61000–3–3: 2013
EN 62233: 2008
Applied national standards
GS-STE-13 (based on it)

The signatories act on behalf of and with the authority of the company management.

H. Jenner
Chairman of the Board of Management

i.V. Reiser
S. Reiser
Director Regulatory Affairs & Certification

Documentation supervisor:
S. Reiser

Alfred Kärcher SE & Co. KG
Alfred-Kärcher-Straße 28-40
71364 Winnenden (Germany)
Tel.: +49 7195 14-0
Fax: +49 7195 14-2212

Winnenden, 2019/01/01

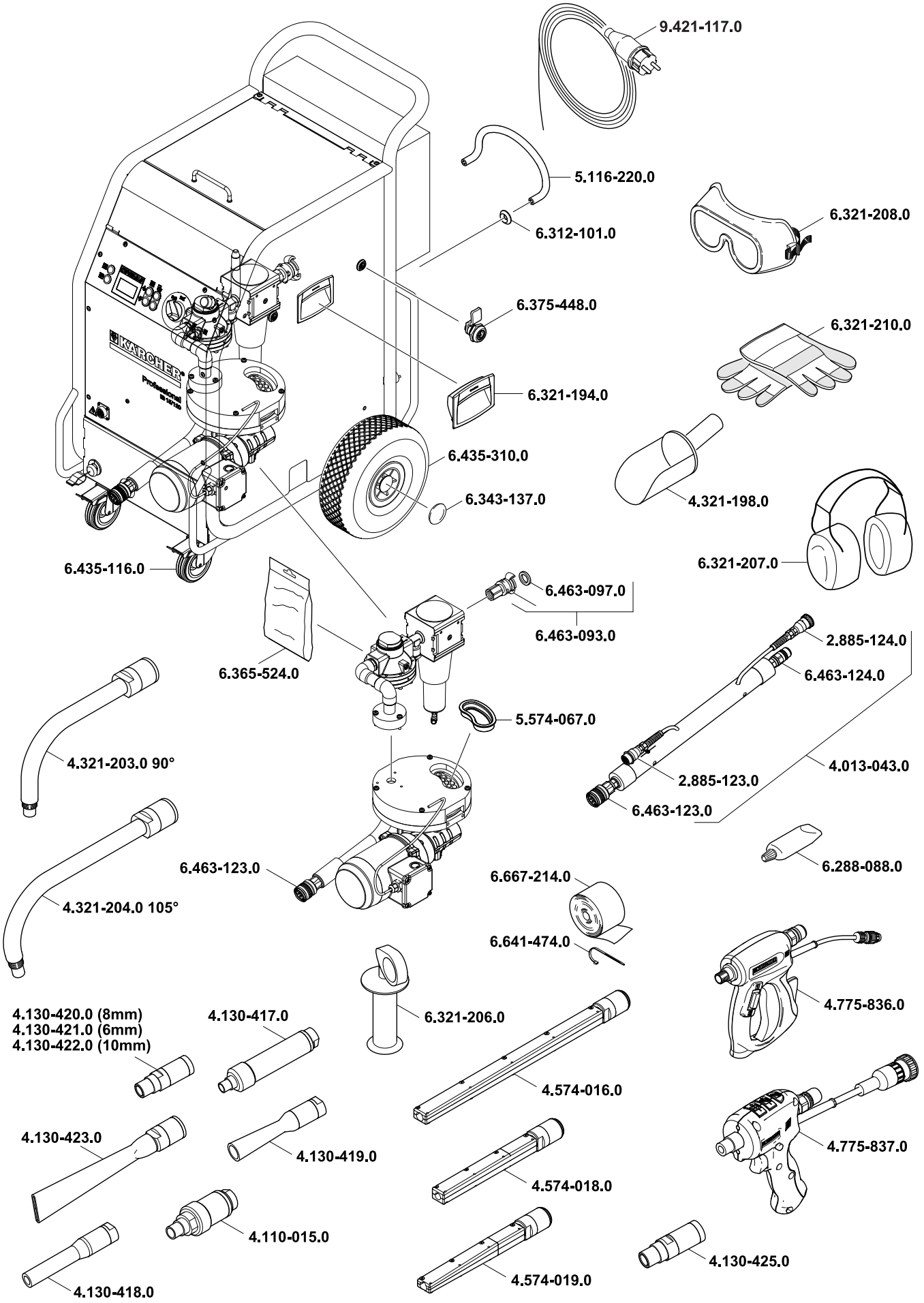

5.966-112.0 24.01.2013



http://www.kaercher.com/dealersearch

